ATOMIZATION OF LIQUID FUELS

THE PRINCIPLE OF LIQIUDS ATOMIZATION

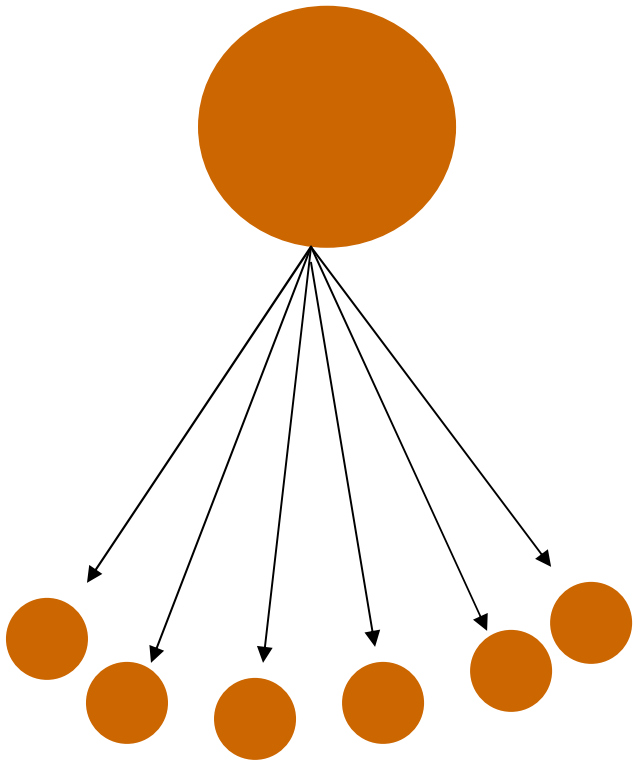

Atomisation is the process whereby bulk liquid is transformed into a collection of drops.

This transformation goes through the break-up of liquid jet into number of filaments, which in turn transform into droplets.

MECHANISMS OF LIQIUDS ATOMIZATION

Three mechanisms:

Disintegration of a liquid jet into a number of filaments, and then into small droplets, requires the surface tension forces of liquid to be overcome. It may happen on the three ways:

- by surface tension between moving liquid jet and steady air which destabilise the jet and causes its disintegration into filaments,
- by centrifugal forces of swirled liquid jet,
- outer mechanical and electrostatic forces and by supersonic acoustic.

FLUID ATOMIZATION WITH DIFFERENT ENERGY

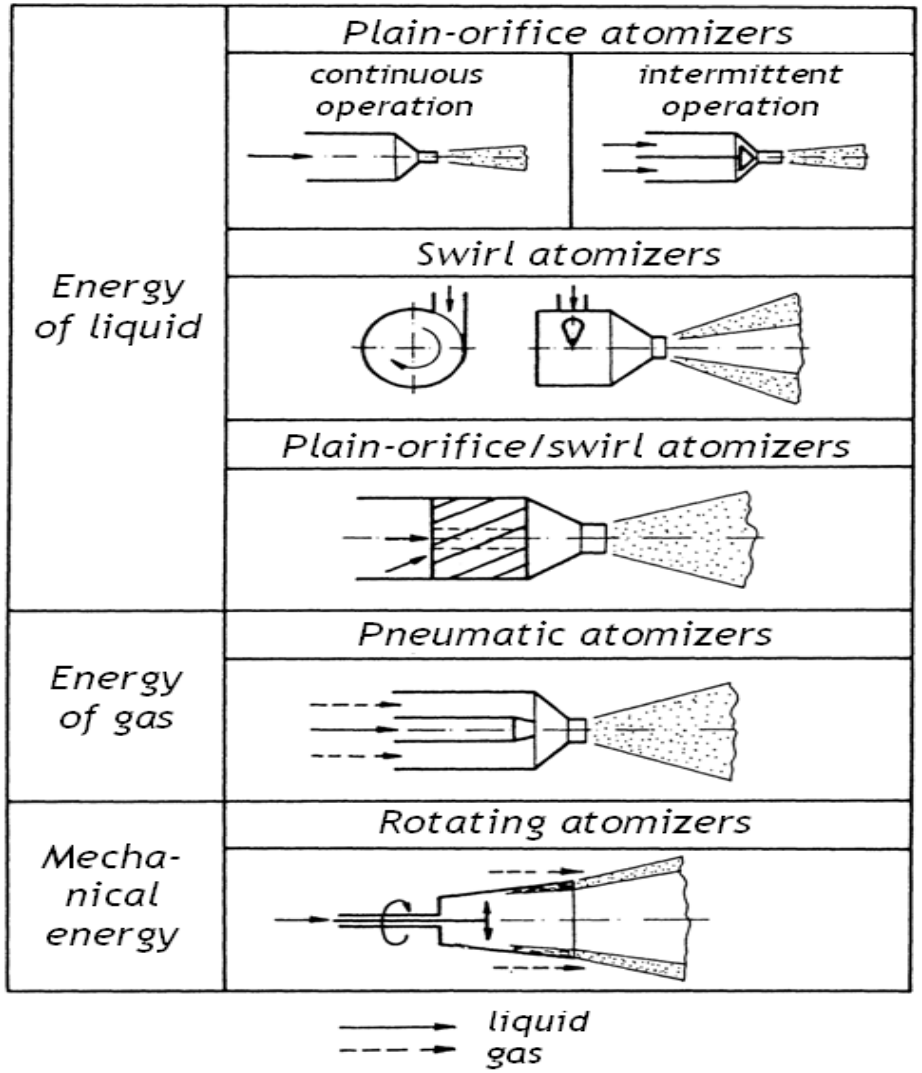

JETS DISINTEGRATION AND DROPLETS BREAKUP

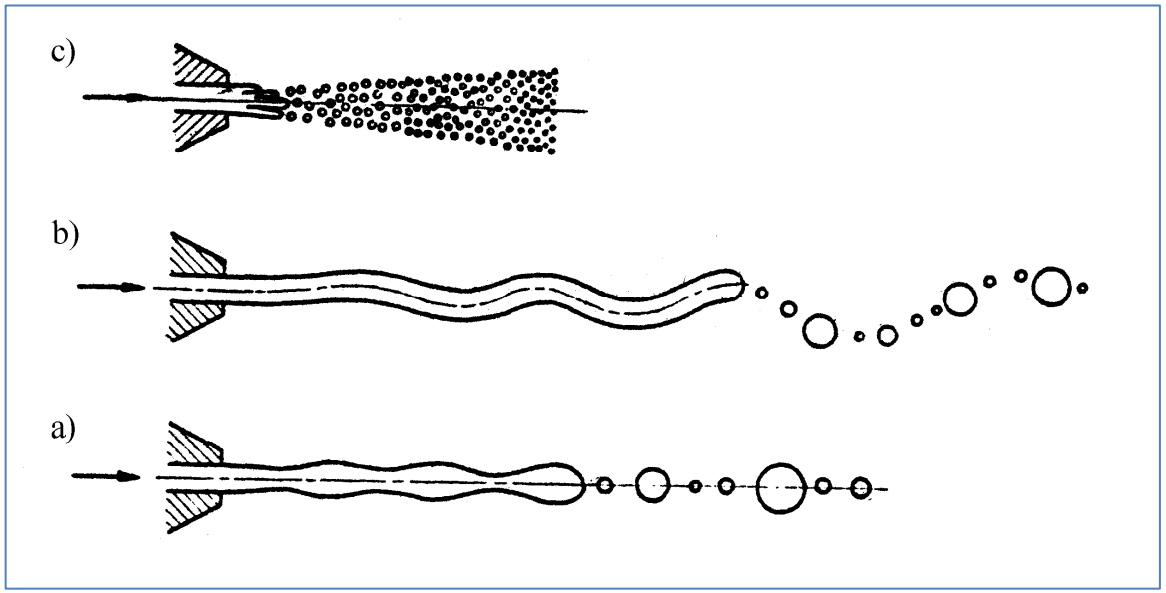

Primary liquid jet disintegration

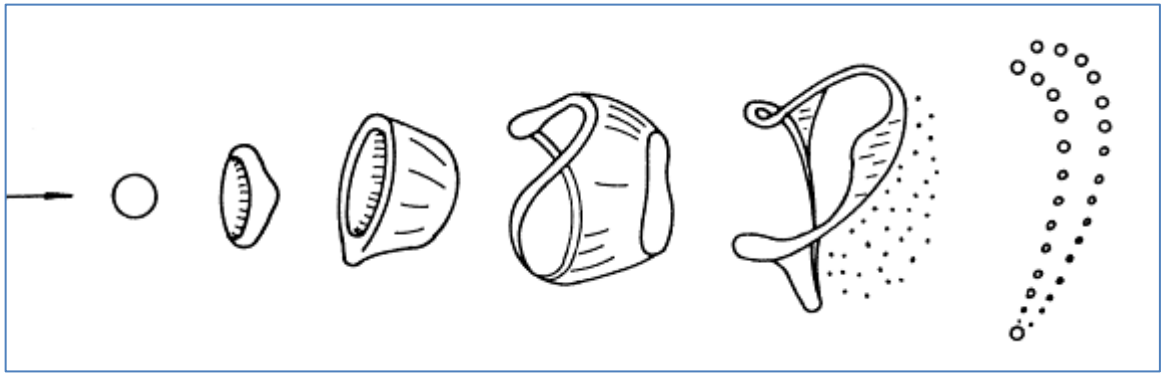

Droplets break-up

RANGE OF LIQUID ATOMIZATION

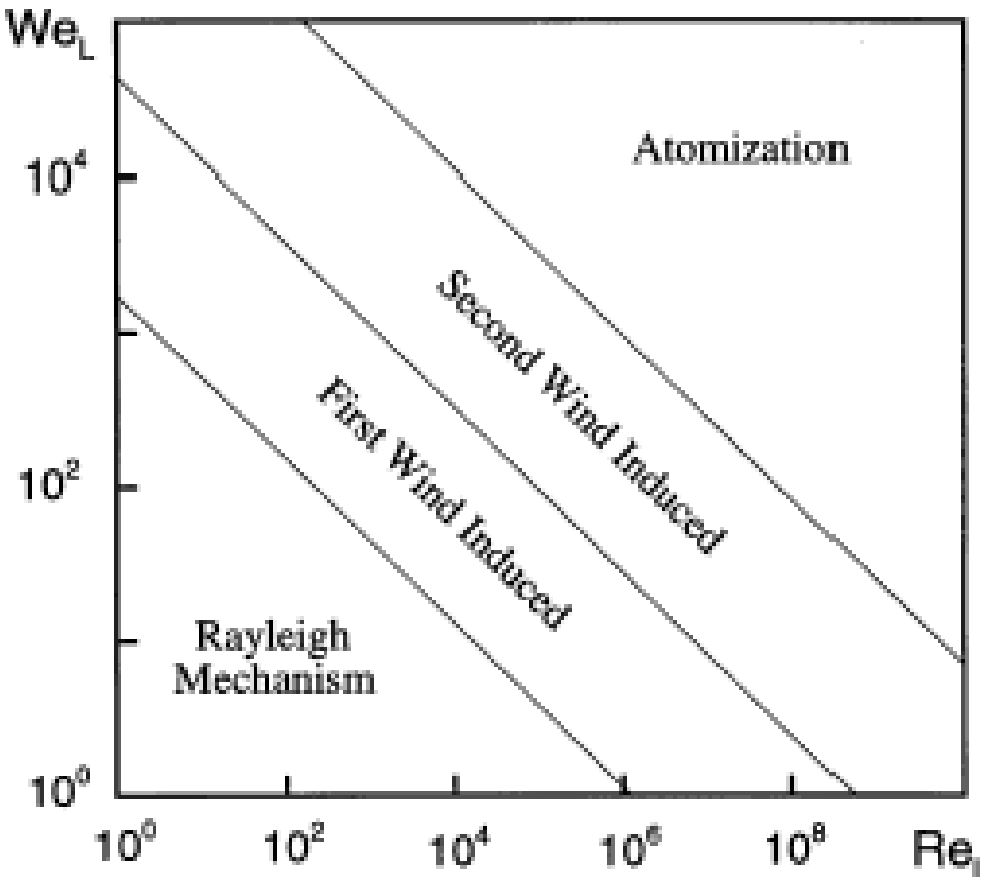

$$Re = (UL)/\nu$$

$$We = (U^2L)/\sigma$$

σ - the surface tension coefficient

INFLUENCE OF PRESSURE-INJETION ON ATOMIZATION EFFECTIVENESS

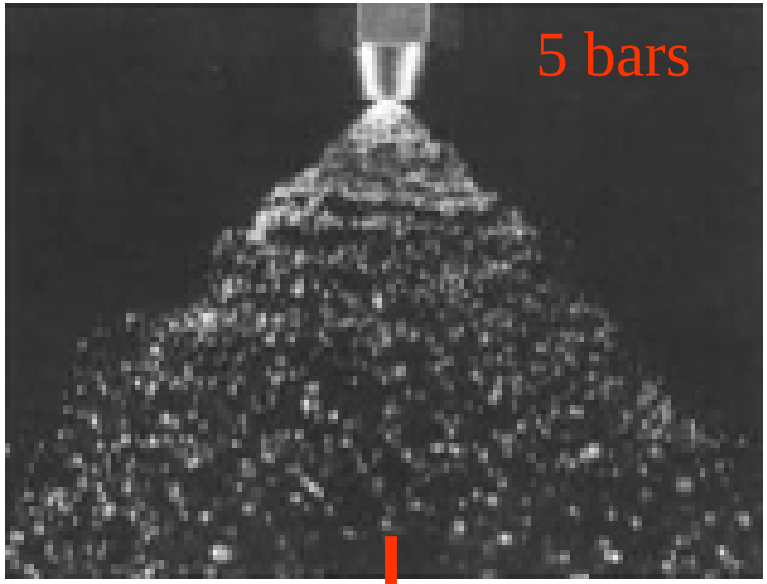

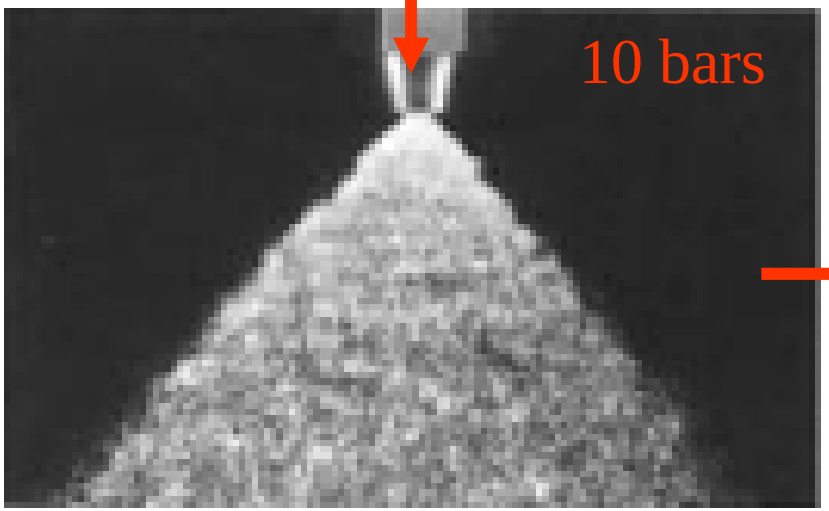

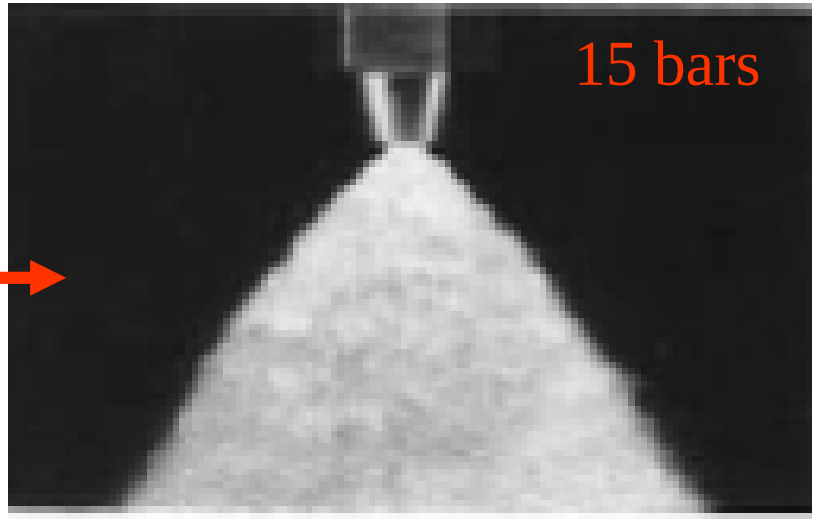

TORCH OF PLAIN-ORIFICE ATOMIZED OIL

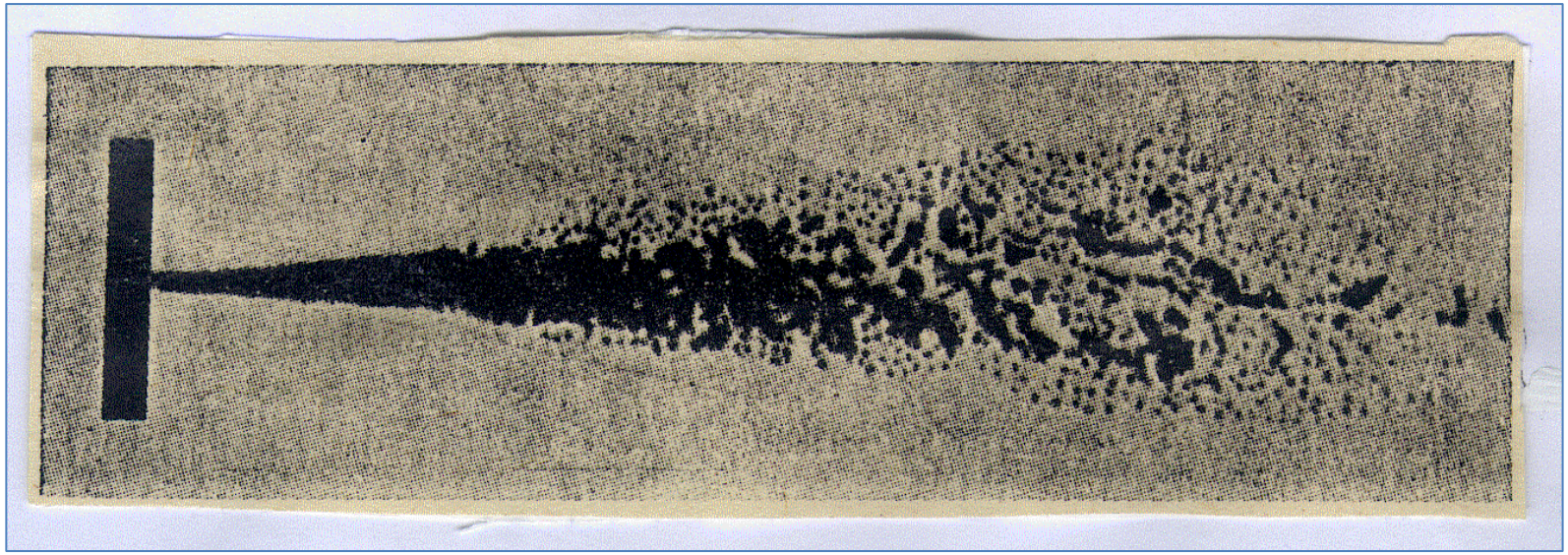

LIQIUD SHEET BREAKUP

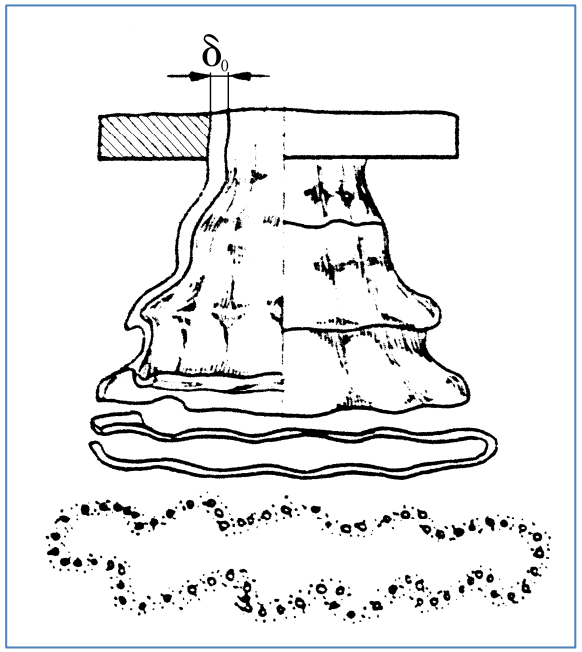

Swirled jet

Rys. 4.39. Tworzenie się kropel w żagwi rozpylacza wirowego

TYPES OF OIL INJECTORS/ATOMISERS

Types of atomizers:

- pressure
  - plain-orifice
  - swirl type
- pneumatics
  - Y type
  - with x- cross shape flow
- rotating

PRESSURE INJECTORS

PLAIN-ORIFICE ATOMISER

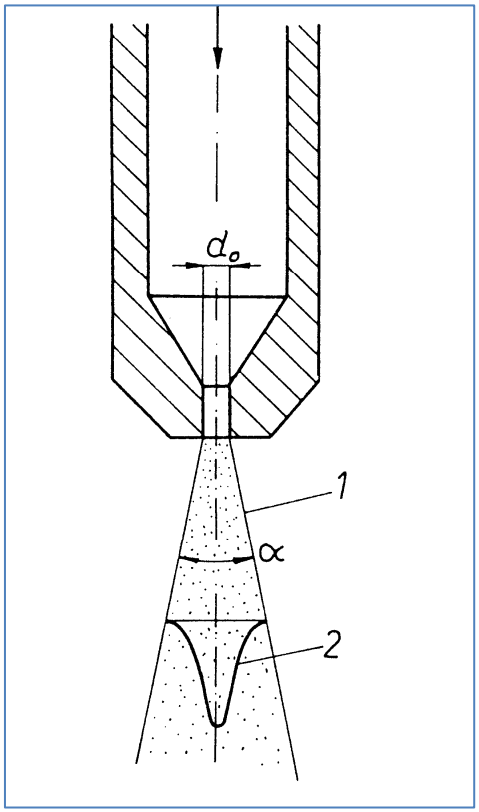

D_o > 0.5 mm

Δp = 0.3-1(5) MPa

α = 5-15°

Simple construction,

Low quality of atomisation

SWIRL ATOMIZERS

HOW A SWIRL NOZZLE WORKS

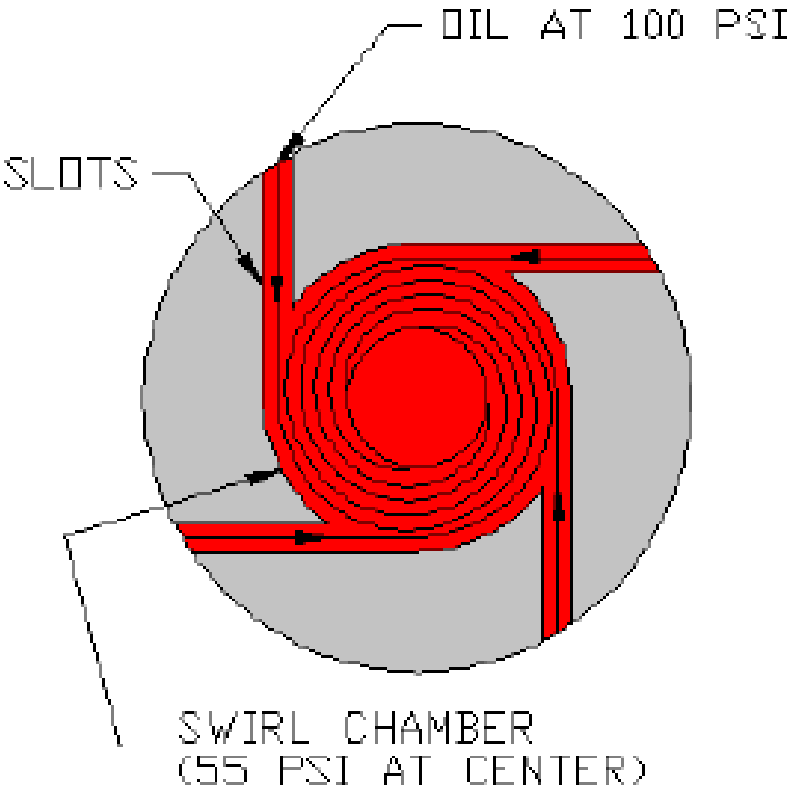

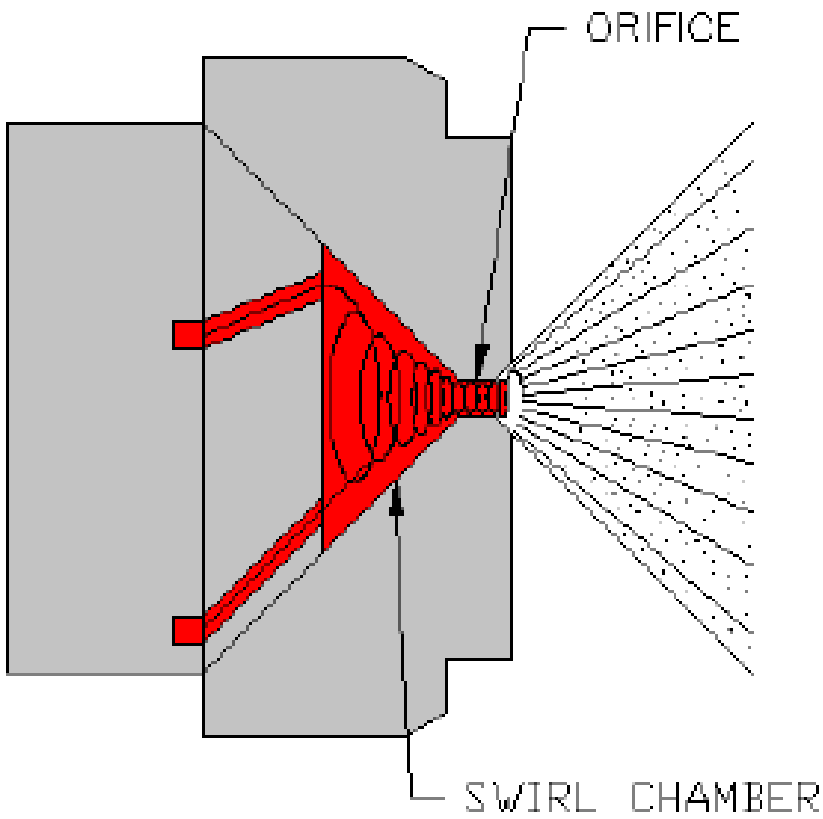

SWIRL NOZZLE: DESIGN

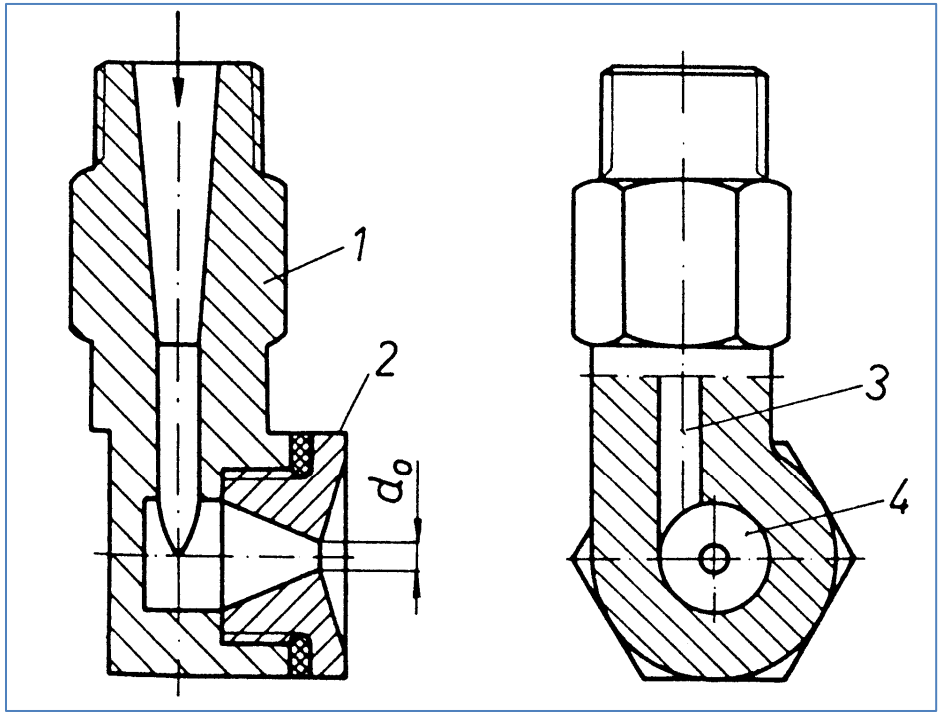

d_o = 2-6 mm

Δp = 0.6-1.0 MPa

α = 45-90°

Simple construction

High reliability

High quality of atomisation

Low energy consumption

SWIRL NOZZLE: AN EXAMPLE

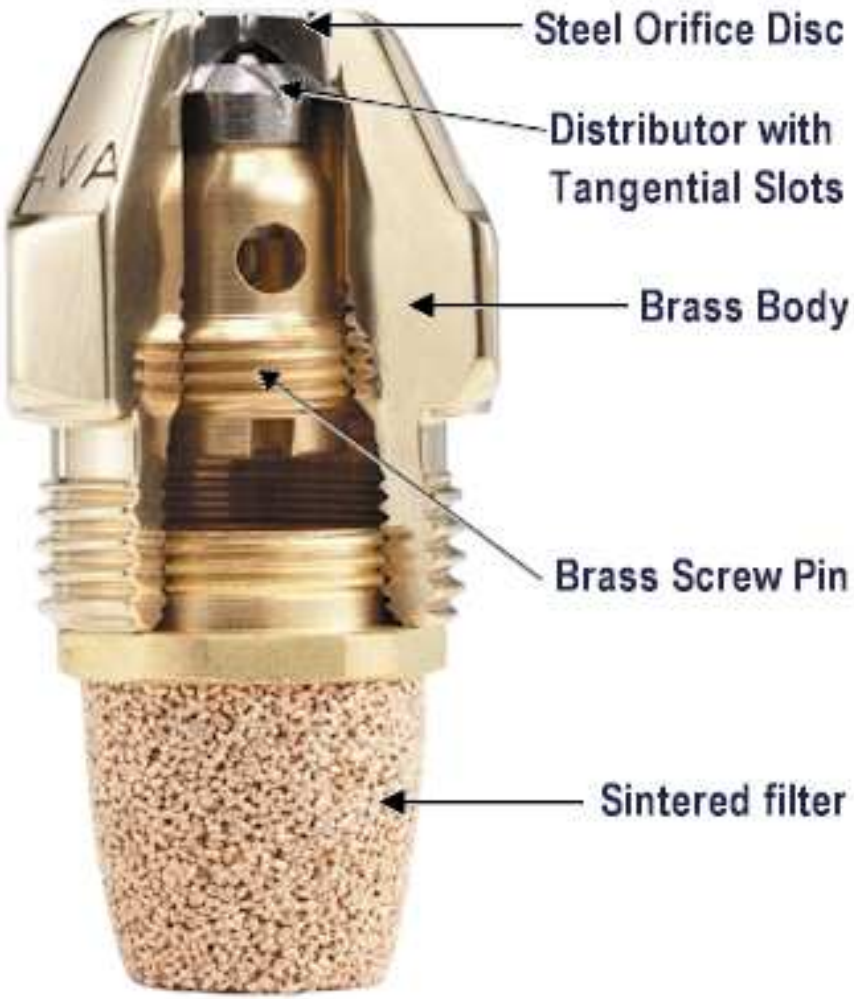

COMPACT SWIRL ATOMISER

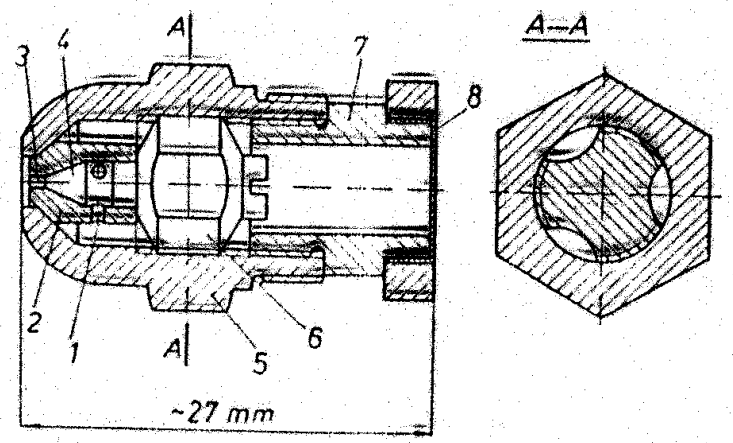

Rys. 3.5. Rozpylacz osiowy ze stycznymi c wlotowymi; *1* - styczn wlotowy, *2* - wkładka, *3* wylotowy, *4* - komora *5* - korpus, *6* - korel towany, *7* - łącznik w *8* - filtr siatkowy

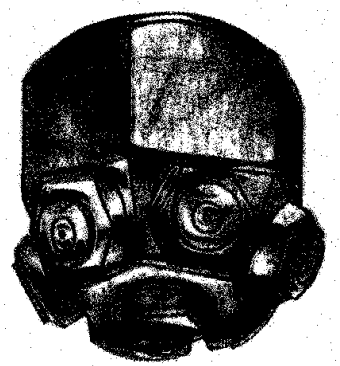

Rys. 3.8. Rozpylacz zespołowy (Spraying Systems)

TYPE OF FUEL CONES

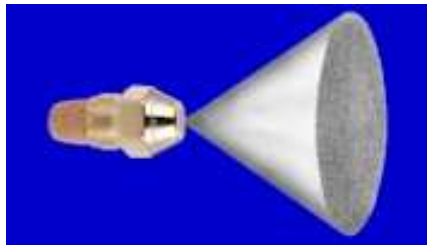

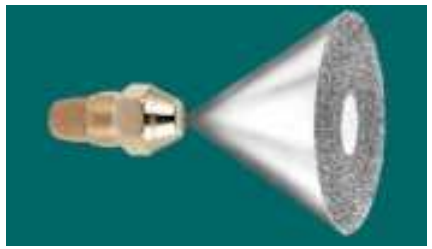

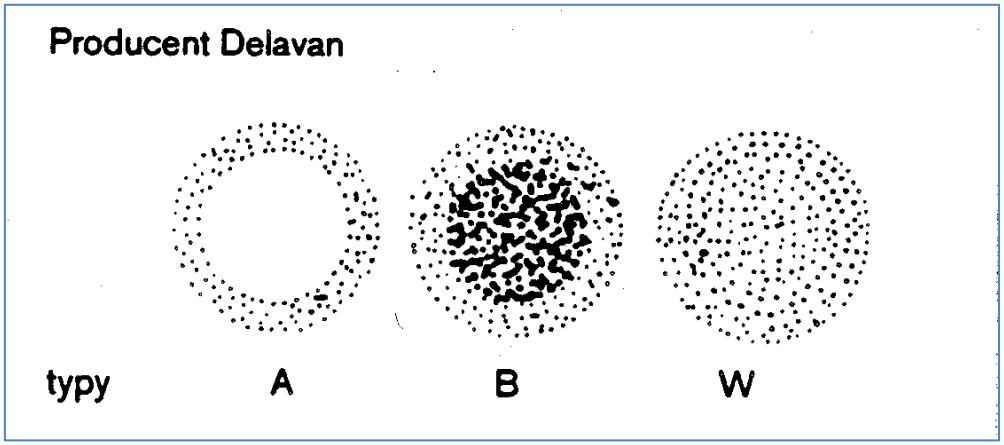

Delavan

SWIRL ATOMISER IN OPERATION

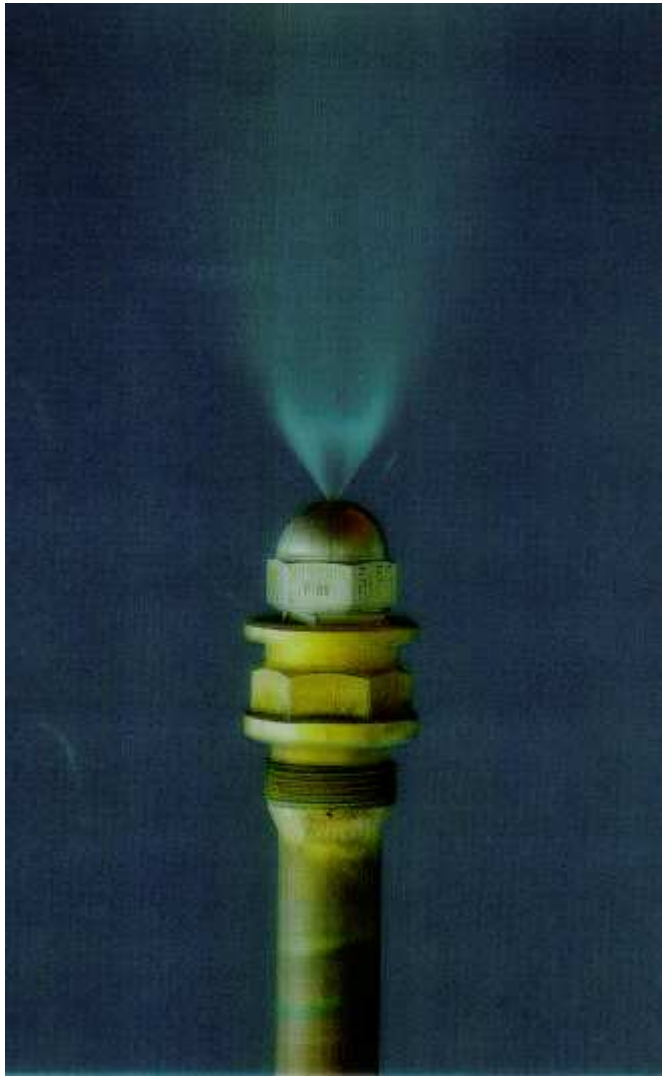

Dispersed oil jet

PNEUMATIC ATOMISERS

PNEUMATIC ATOMISER: PRICIPLE OF OPERATION

liquid fuel

deformation wave of fuel

small droplets formed outside of the stream

dispersion of the stream

small droplets formed from the stream

big droplets formed from the disintegration of the stream

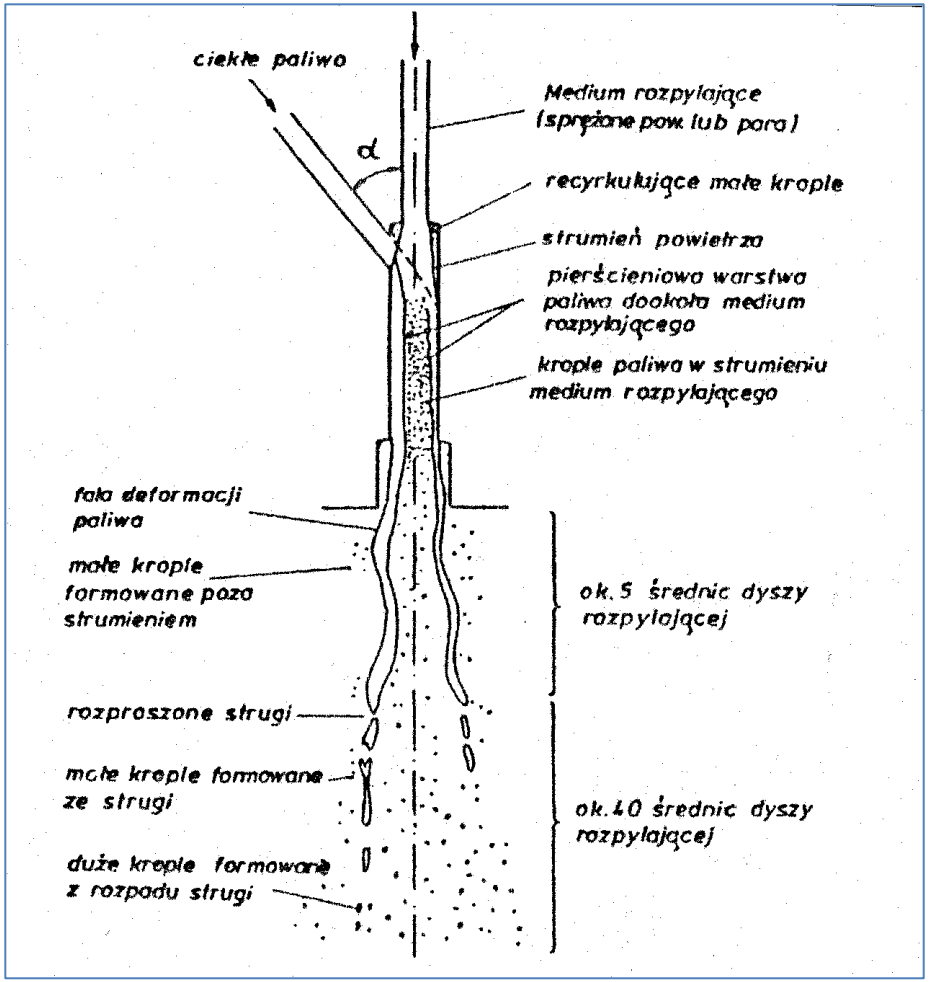

atomizing medium air / steam

recirculating small droplets

air jet

layer of fuel around the atomizing medium

abut 5 x diameter of atomizing nozzle

abut 40 x diameter of atomizing nozzle

Consumption of atomising medium: δ =0.06-0,1 kg/kg

PNEUMATIC ATOMISER OF Y TYPE

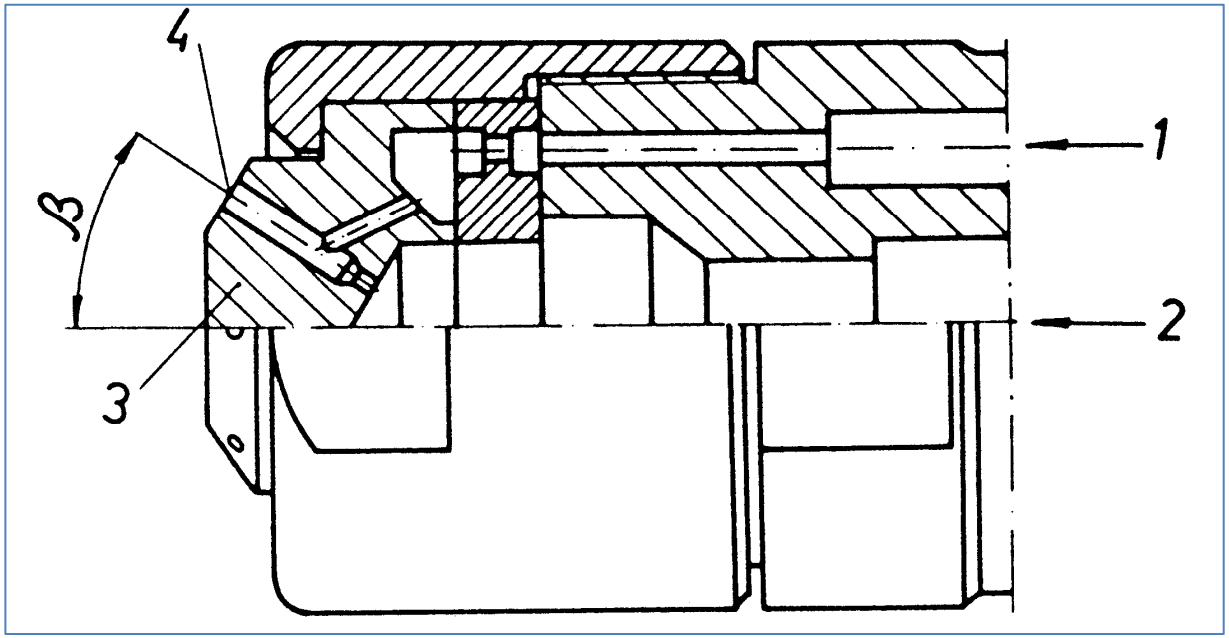

Pneumatic atomizer of Y type:
1 – oil, 2 – gas, 3 – atomising head, 4 – nozzles

PNEUMATIC ATOMISER OF CROSS-SHAPE FLOW TYPE

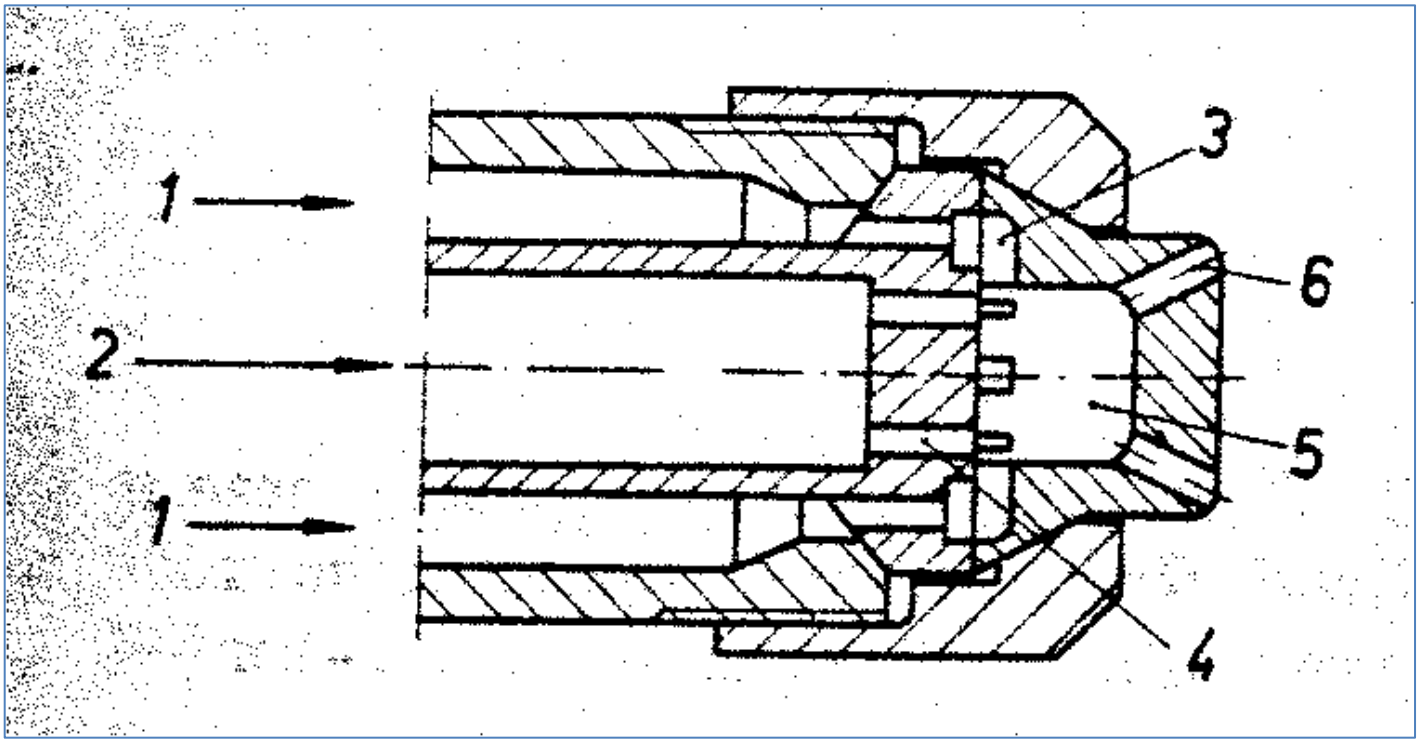

Pneumatic atomizer of the cross-shape flow type:
1 – oil, 2 – gas, 3 – oil injection, 4 – gas injection,
5 – mixing chamber, 6 - nozzles

ROTATING ATOMISERS

How does operate rotating atomizer?

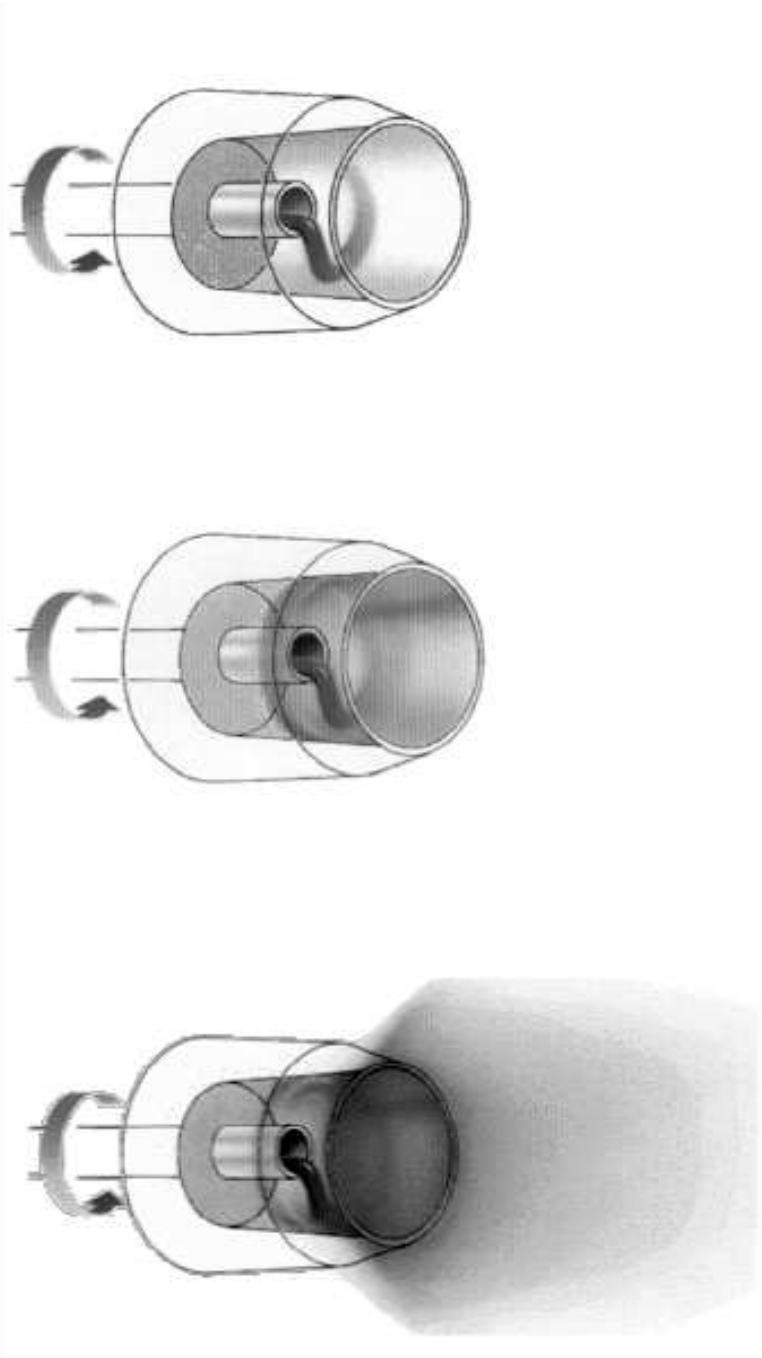

OIL BURNER WITH ROTATING ATOMISER

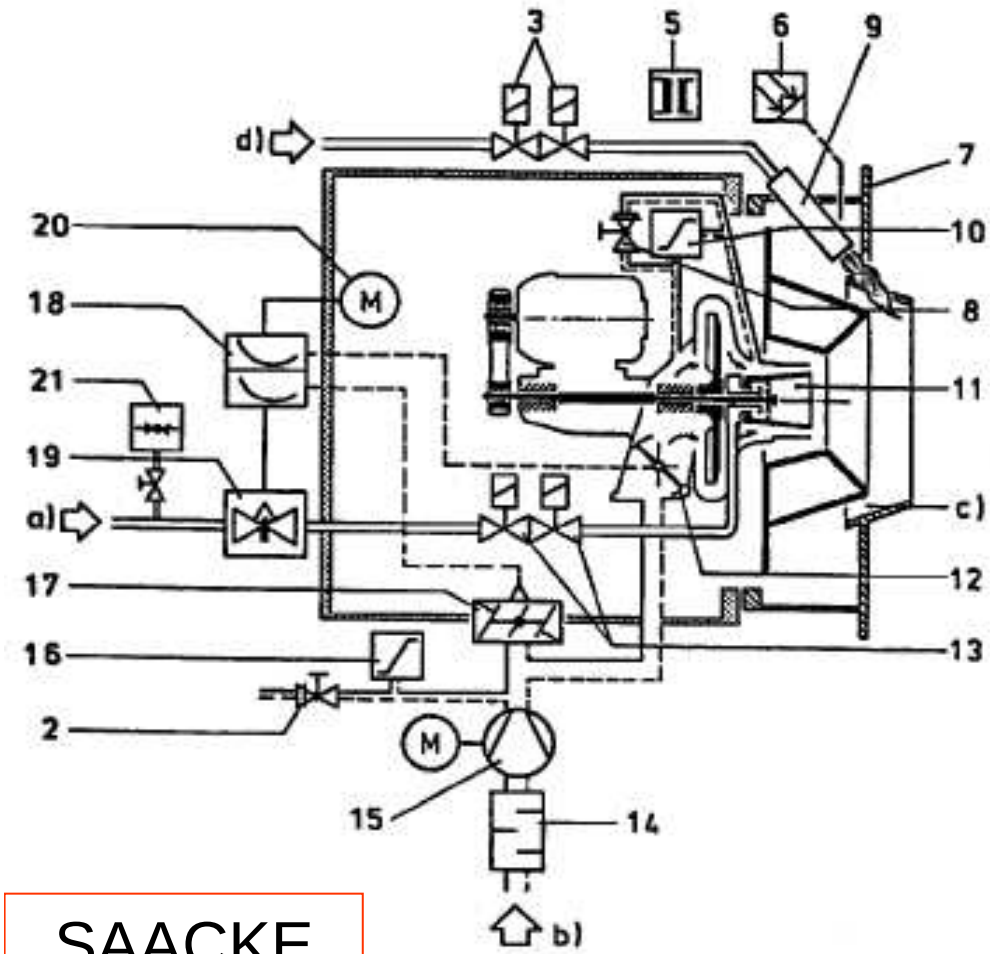

2 Self-closing valve
3 Electromagetic valves for ignition gas [1)]
5 Ignition transformer
6 Flame scanner [2)]
7 Outer register ring
8 Self-closing valve
9 Igniter
10 Differential pressure monitor for primary air
11 Rotary cup atomizer
12 Primary air damper
13 Electromagnetic valves for fuel oil
14 Air elbow unit
15 Fan unit for combustion air
16 Pressure monitor for combustion air
17 Air metering unit
18 Control disk unit with 2 cam strips
19 Rotary valve
20 Servodrive
21 Pressure measuring device w/shut-off valve

a) Fuel oil inlet
b) Combustion air inlet
c) Combustion air annulus
d) Ignition gas inlet

1) Automatic quick-closing safety shut-off fittings
2) does not belong to the burner

The exact scope of supply of your plant can vary from that shown here.

SAACKE

CONTROL OF OIL FLOW RATE

ATOMISATION PRESSURE VARIATION

1. The simplest way for oil output/consumption control is variation of pressure of atomisation.
2. Disadvantage of this method of output control is loss of atomisation quality due to reduction of atomisation pressure.

Rate of oil output ~ $(\Delta p)^{0.5}$

Two-step control of oil flow rate

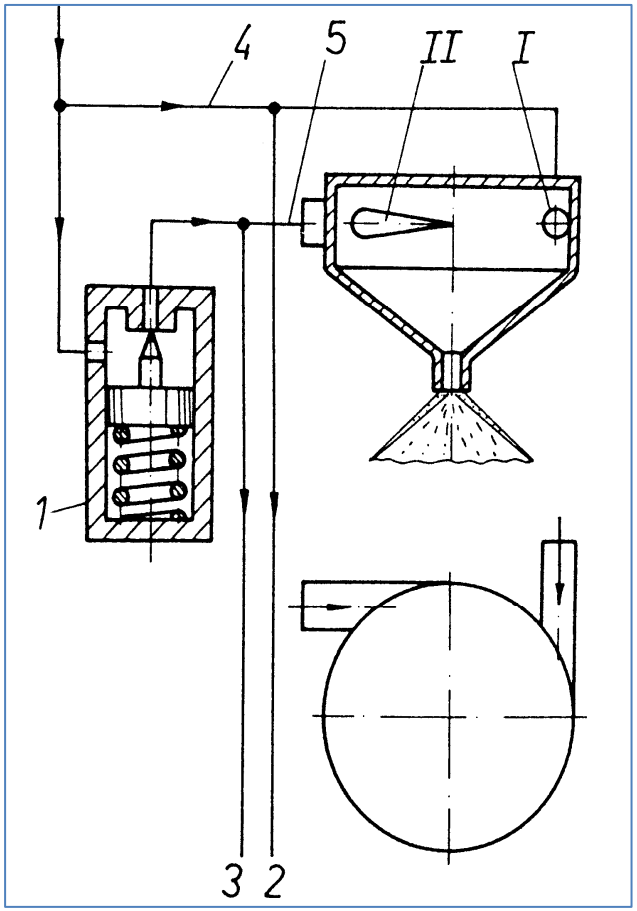

Scheme of single chamber two-step oil atomizer:
1 – valve, 2, 3 – recalculating pipes

CIRCLE MECHANICAL (RETURN- FLOW) ATOMIZER

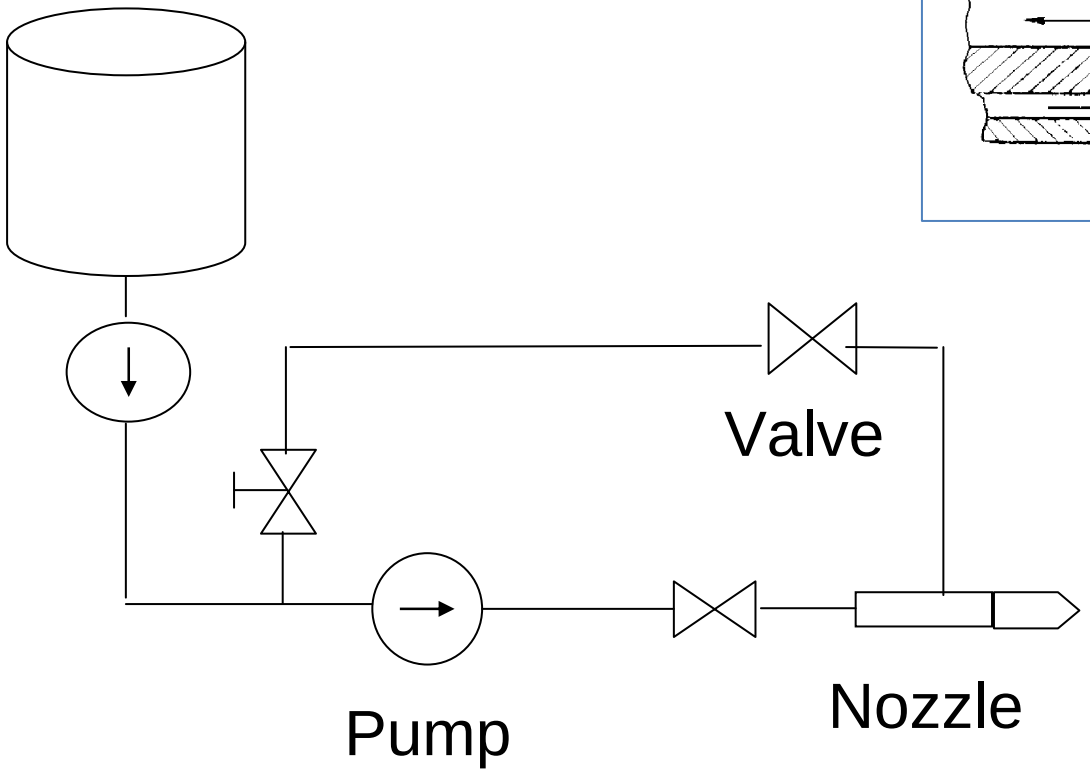

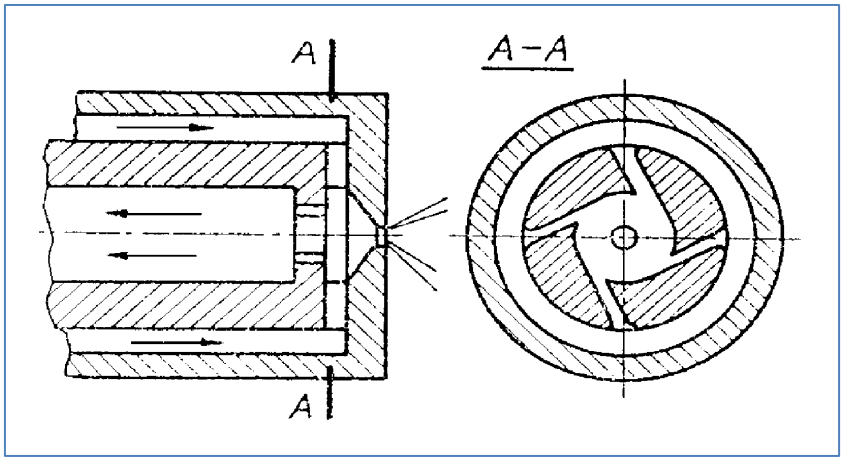

Fuel nozzle

RETURN OIL INNER CIRCLE ATOMIZER

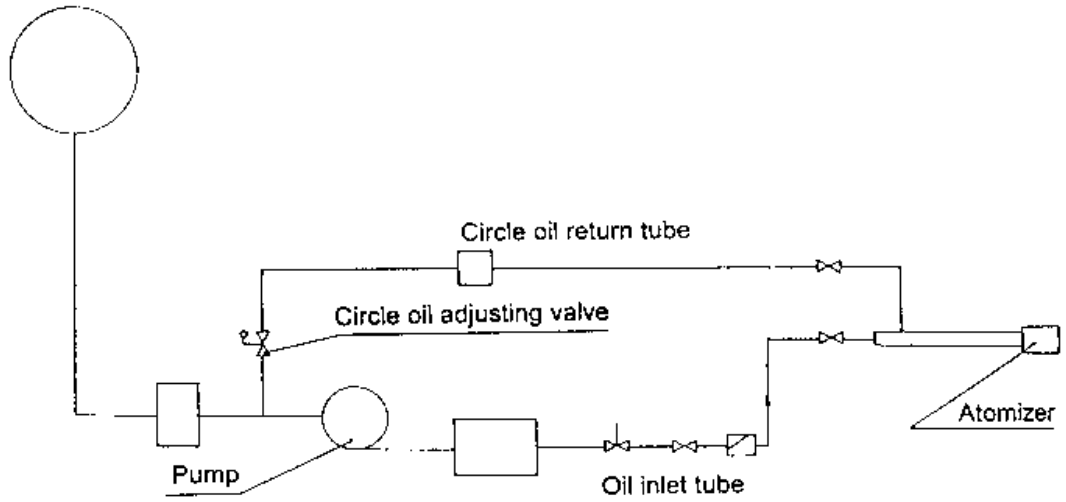

FIGURE 5-5. The oil pipe arrangement for a return oil or circle oil atomizer

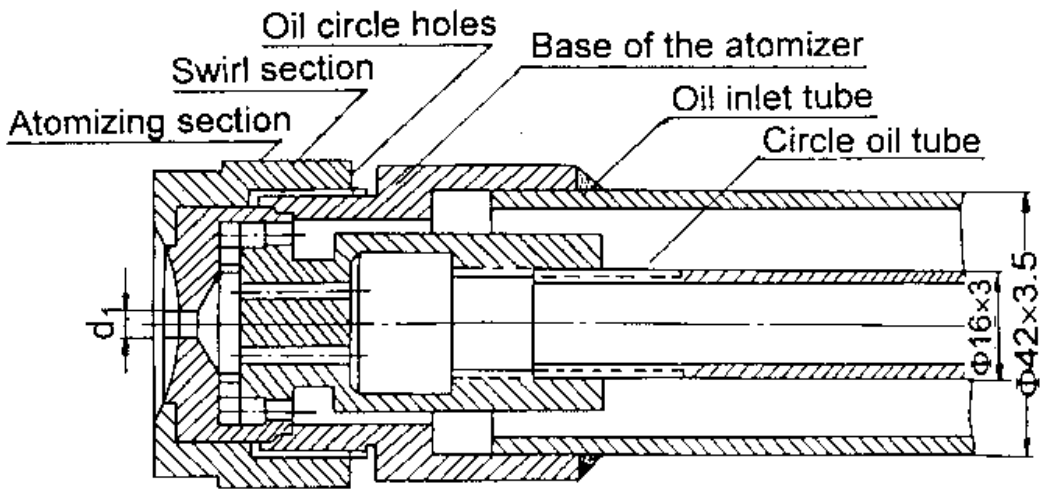

FIGURE 5-6. Cross section view of a return oil inner circle type atomizer

CIRCLE OIL ADJUSTING VALVE

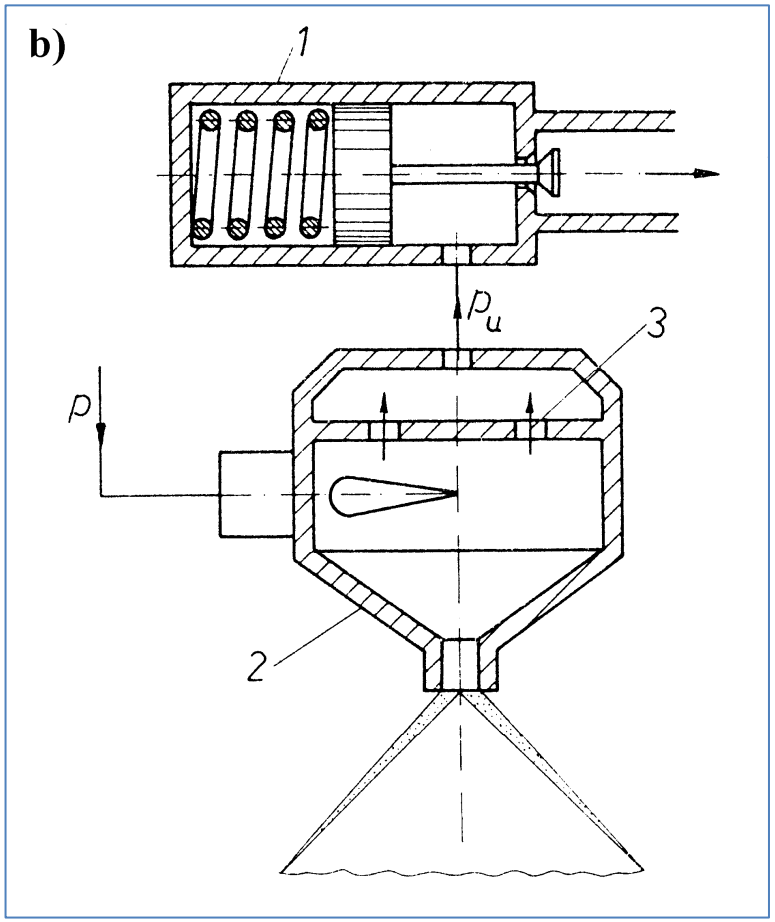

1 – VALVE, 2 – SWIRL CHAMBER,
3 – OIL CIRCLE HOLES

TWO-NOZZLES ATOMIZER

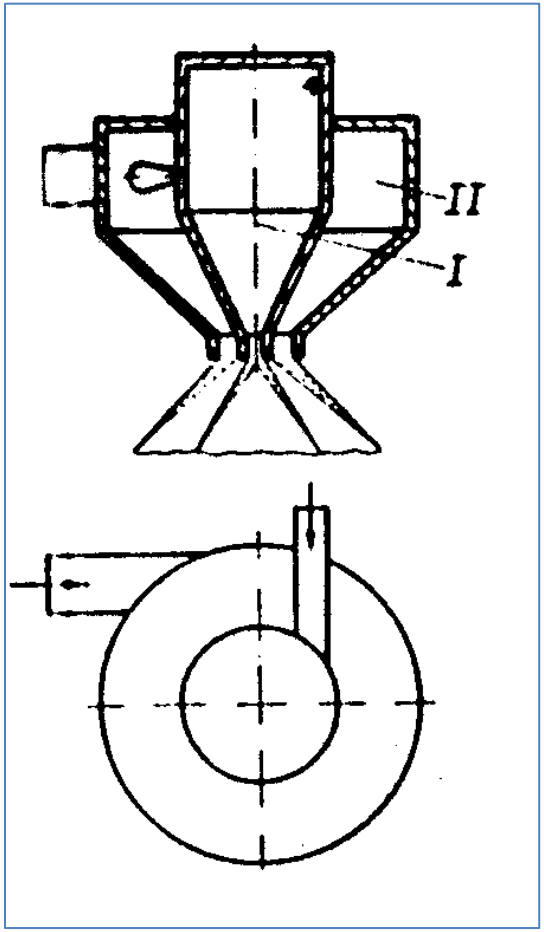

I – nozzle

II - nozzle

QUALITY OF ATOMISATION

PARAMETERS OF ATOMIZATION

- output, kg/s
- angle of dispersion, deg
- droplets distribution,
- mean diameter of dispersion, m.

CHARACTERISTICS OF ATOMIZING NOZZLE

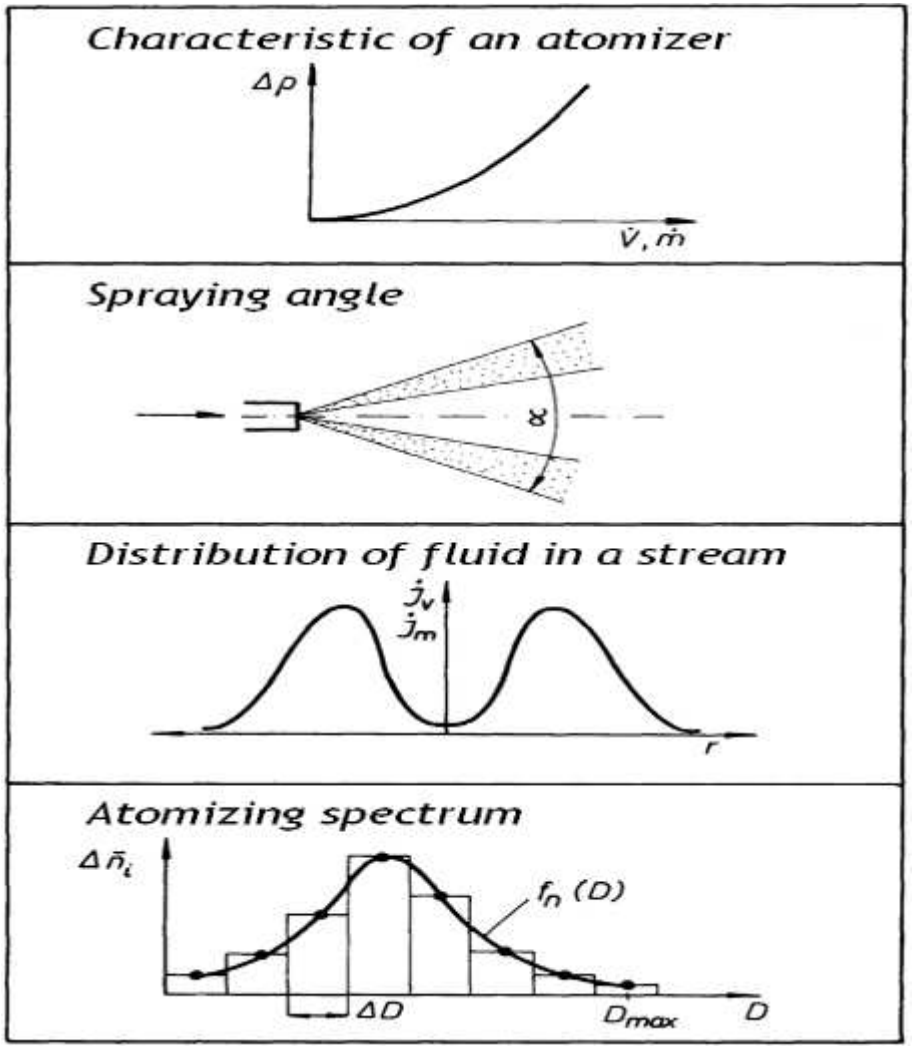

OUTPUT of PRESSURE ATOMIZERS

Output *m* of pressure atomizers is defined as follows:

$$m = \mu A(2\rho_c \Delta p)^{0,5}$$

where: *A* is the area of nozzle output, p is pressure and μ is the outflow coefficient.

DROP SIZE DISTRIBUTION

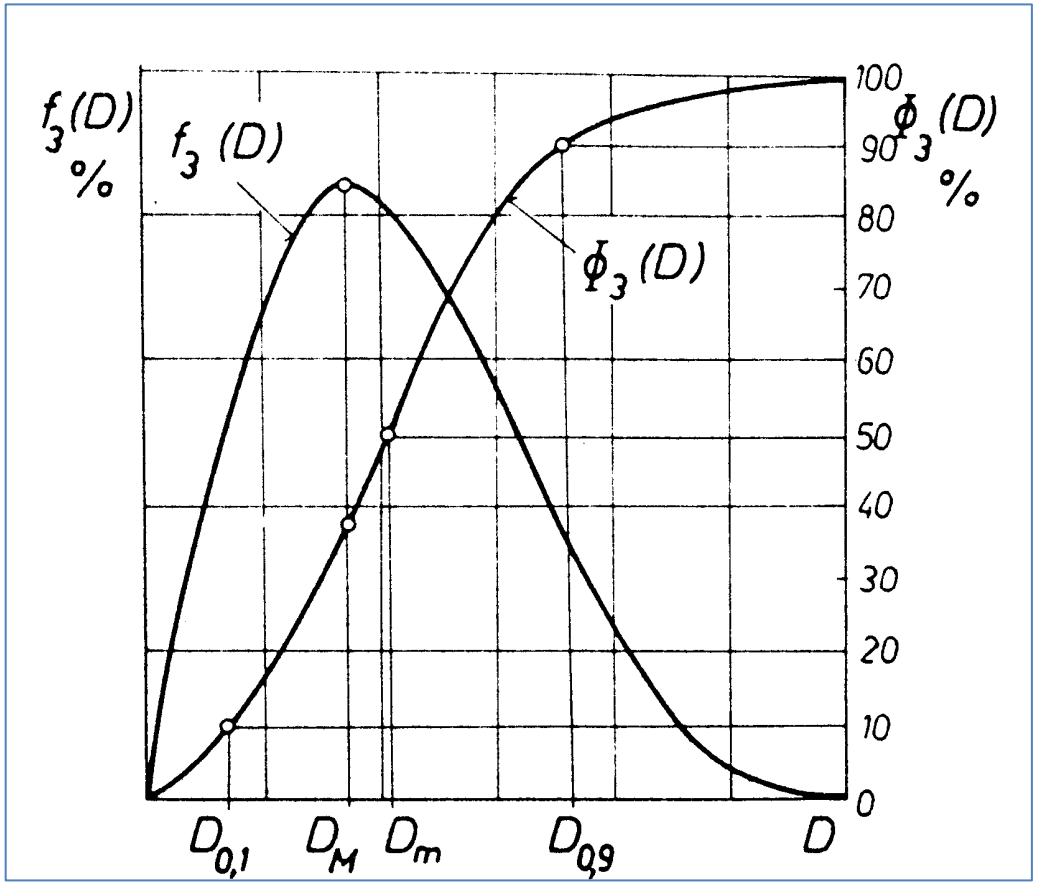

Drop size distribution curves

CHARACTERISTIC OF DROPLETS SIZE

Mean drop size:

mean drop size

$$SRK = [(\Sigma nD^3/\Sigma nD)]^{0,5},$$

mean drop size of Sauter

$$SMD = \Sigma\, nD^3/\Sigma\, nD^2.$$